Motor Fan w/ Potentiometer & Switch

Materials:

- DC motor
- 1x 100 Ω
- 3x 200 Ω
- Potentiometer
- Switch
- 3x LEDS:
    - 1 Green, 1 Blue, 1 Red
- Power Supply

How it works:

This circuit controls the speed of a DC motor (fan) using a potentiometer and a switch, while LEDs provide visual feedback of the operating state. The switch is used to turn the circuit on and off by controlling the flow of power from the supply to the motor and other components.

The potentiometer acts as a variable resistor, allowing the user to adjust the amount of current flowing to the motor. As the resistance is decreased, more current flows and the motor spins faster; as resistance increases, the current decreases and the motor slows down. This provides simple, manual speed control of the fan.

The fixed resistors are used to limit current and protect the LEDs from excessive current. The green, blue, and red LEDs indicate different operating conditions of the circuit, such as power on, medium speed, or high speed, depending on how they are connected within the circuit.

Inside the motor:

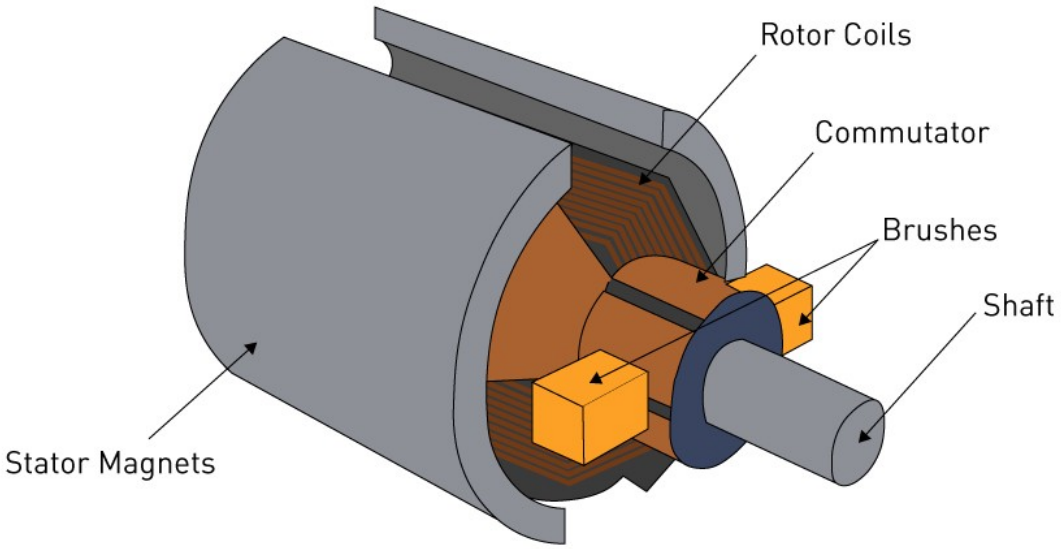

Rotor Coils: The rotating piece in the motor. It turns whenever the magnetic field from the alternating current interacts with the magnetic field from the stator magnets.

Commutator: A rotating conductor piece that helps to reverse the direction of current each half-turn in the rotor coils.

Brushes: Helps to bring current from the power supply to the commutator and then to the rotor coils.

Shaft: A rod that helps to transfer the rotational energy to the fan.

Stator Magnets: Produce a magnetic field.

Maxwell's Equations for Electromagnetics

Faraday's Law of Electromagnetic Induction

$$\nabla \times \mathrm{E} = -\frac{\partial \mathbf{B}}{\partial t}$$

Meaning: A changing magnetic field induces an electric field (and hence, an emf).

In a motor: This is the key law, where the magnetic field from the stator magnets induces voltages (emf) in the rotor windings, producing current and torque.

Ampère-Maxwell Law

$$\nabla \times \mathrm{B} = \mu_0 \mathrm{J} + \mu_0 \epsilon_0 \frac{\partial \mathbf{E}}{\partial t}$$

Meaning: Magnetic fields are generated by electric currents and by changing electric fields.

In a motor: The current in the rotor coils creates the magnetic field that interacts with the stator magnets, producing torque or rotational energy.
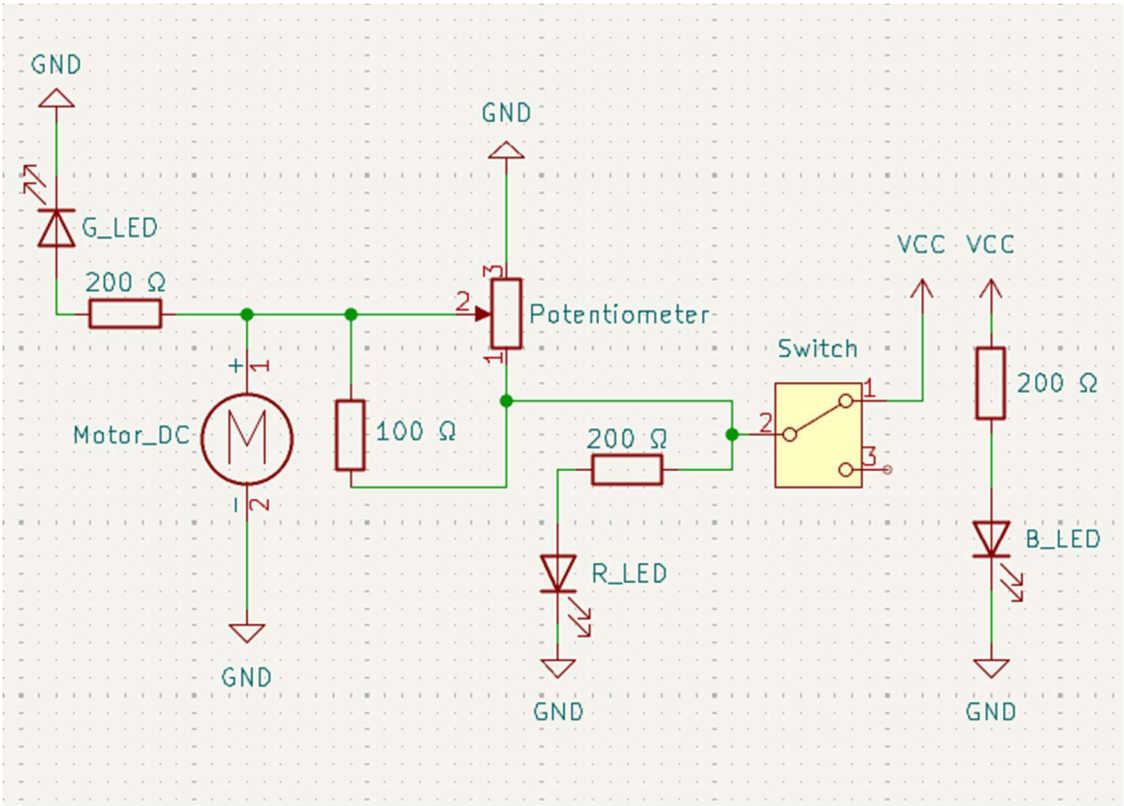
Schematic (KiCAD):